# A method of shaft inlet air heating through methane regenerative thermal oxidation

**Gao Pengfei**[1, 2, 3, a, *]

[1]Chongqing University, Power Engineering College, Chongqing, 400044, China

[2]State Key Laboratory of the Gas Disaster Detecting, Preventing and Emergency Controlling, Chongqing, 400037, China

[3]China Coal Technology Engineering Group Chongqing Research Institute Chongqing, 400037, China

[a]gpfmky@163.com

**Keywords:** regenerative thermal oxidation, methane utilization, heating technology, coal mine methane

**Abstract:** Coal fired boiler or coal-fired hot blast stove is used in the heating system of coal mine for shaft inlet air heating (SIAH). The smoke and dust emission pollution is serious and the energy consumption is high. With the intensification of haze and the implementation of energy-saving and environmental protection policy, this heating mode of SIAH will be gradually banned. In view of this situation, a process method of flue gas heating for SIAH after coal mine methane (CMM) regenerative thermal oxidation (RTO) device is designed to replace coal-fired boiler or coal-fired hot blast furnace. The working principle and main composition of the system are introduced. The special design is carried out around the safety of the system. The distribution of flue gas heat after oxidation and the adjustment process with the change of load are analyzed, and the effect of application is evaluated. The research shows that the CMM RTO for SIAH method can effectively solve the need of coal mine heating, promote the safe production of coal mine by destroying and treating the low concentration methane which is difficult to use, achieve greenhouse gas emission reduction, and provide a new model for the transformation and upgrading of coal enterprises.

## 1. Introduction

SIAH is an important guarantee for safe production in coal mine heating season, especially in the cold area of northern China, whose function is to avoid the formation of ice in the wellbore to affect the normal use of mine production equipment. Coal burning boiler or coal-fired hot blast stove is the common heating type in coal mine, which is characterized by heavy soot pollution and high energy consumption in coal combustion process. With the increase of haze in winter and the increasing attention to environmental protection, more and more attention has been paid to the emission of pollutants from coal-fired boilers. Small-tonnage coal-fired boilers and coal-fired hot-air stoves are gradually being banned by energy-saving and environmental-friendly energy supply. There are many kinds of alternative energy supply methods for SIAH [1-5], such as gas boiler, air source heat pump and electric heating. However, some limitations or shortcomings of this technology make it difficult to be popularized: the fuel consumption cost of gas boiler is higher, the electricity consumption cost of electric heating way is higher, and the actual heating effect of air source heat pump is not good, while the cost of electricity consumption is high and special requirement is needed for low grade heat source. In order to solve the problem of heavy pollution and high energy consumption for traditional way of SIAH, this paper combines CMM RTO technology [6-13] with the requirement of SIAH. The method is feasible in technology, good in economy, stable and reliable for SIAH, and can destroy the low concentration CMM which is difficult to use directly, promote the safe production of coal mine, reduce greenhouse gas, and achieve more benefits with one stone.

  DOI: 10.25236/epcimms.2019.23

## 2. Principal of CMM RTO for SIAH technology

### 2.1 Operating principles of the system

When CMM and air are mixed through the mixing system and the concentration reaches the requirements of the system, the mixture is transported to the RTO unit where the oxidation reaction takes place, and the heat is produced to maintain the heat balance of the RTO unit itself. The excess heat is pumped out in the form of high temperature smoke, sent to the gas/gas heat exchanger to produce the hot air above 60 ℃ for mixing the fresh air at the shaft inlet to above 2 ℃, so as to achieve the purpose of SIAH in the heating season. At the same time, the other part of the high temperature smoke will be sent to the gas/water heat exchanger and the boiling water furnace respectively to produce hot water for bath and drinking water respectively, realizing the utilization of the heat energy of the high temperature smoke in many ways. After heat transfer, the smoke will be cooled to about 100-150 ℃ and sent to the chimney. In order to prevent freezing during gas mixing and transporting process in the pipeline during heating period of north coal mine, through design and adjusted calculation, the smoke with suitable flow rate is selected to the mixing section of CMM and air, and the smoke from 100-150 ℃ is mixed with air once, (a mixture of several small diameter smoke pipes and air pipes through hedge mixing) with the goal of temperature is larger than the dew point temperature of water at normal temperature (0 ℃), and the mixture with CMM is mixed twice in the mixer. At the same time, the heat preservation material is laid in the system pipeline to ensure that there is no ice hidden danger in the mixing and conveying process, maintaining safe and stable operation of the system.

### 2.2 Composition of main systems

The system is mainly composed of CMM mixing and conveying system, RTO device, heat exchanger for SIAH, heat medium conveying pipeline, heat distribution regulating system, chimney, monitoring system, and other subsidiary pipes and valves. The monitoring system contains signal interlocking emergency stopping technology, including setting gas flow rate and system stop signal to ensure the safety of system equipment when lightning strike, mis-operation and other unexpected conditions occur.

(1) Low concentration CMM transportation safety system, mainly including water seal, fire proof and explosion relief device, automatic explosion arrester device, automatic powder injection explosion suppression device, flame sensors, pressure sensors, concentration sensors, automatic tailrace device and monitoring sub-station, and so on. A steam separator is generally added in the end of the CMM transportation pipeline to prevent a large amount of water entering the RTO unit for affecting the heat transfer efficiency. The low concentration CMM transportation safety system sets up three kinds of fire arresting equipment through different fire resistance mechanisms and effectively regulating and controlling by monitoring substations, which can ensure the safety and reliability of low concentration CMM transportation.

(2) CMM mixing and conveying system, which mainly includes air intake pipe and flow regulating valve, mixer, mixing process monitoring system, pipeline and valve of mixed conveying system, etc. The main function is to provide a safe and reliable methane source with uniform mixing for the CMM RTO unit (the concentration can range from 0.2%-1.2%, and the concentration can be adjusted and controlled according to the demand); The main characteristics of the system are that the flow rate of the gas source is stable, the transportation temperature can ensure that there is no ice hidden danger in the pipeline in winter, the mixture gas concentration fluctuates little, and the mixing uniformity is high.

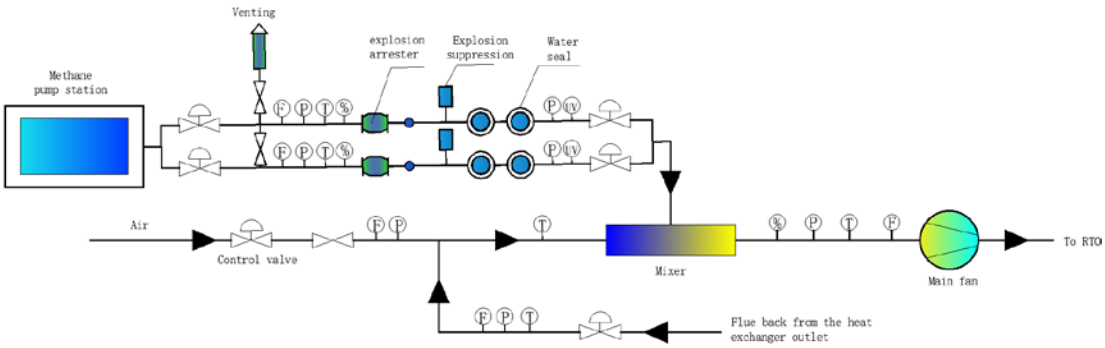


Fig.1 A mixture system of air and coal mine methane

(3) The main function of the CMM RTO device is to preheat methane fuel in the regenerator, and oxidize it in the combustor to produce high temperature smoke. The heat is stored in the regenerative chamber on the outlet side and flowed to the chimney. The excess heat can be pumped out through the top flue gas heat outlet for thermal energy utilization.

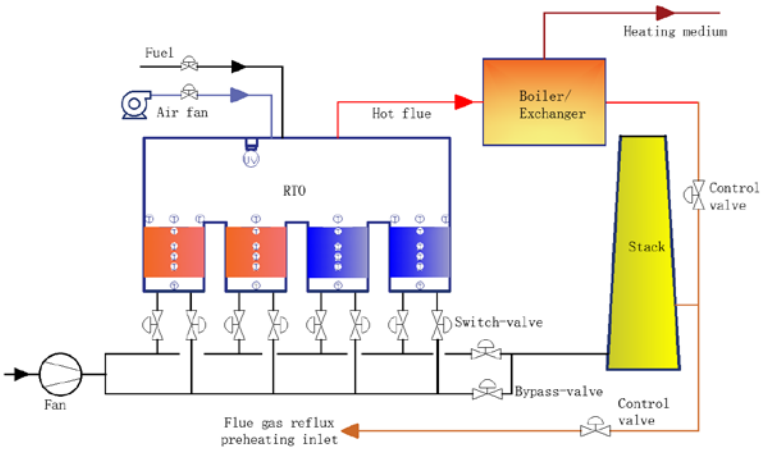


Fig.2 The process of four beds structure methane regenerative thermal oxidation

The designed RTO unit is a structure of four regenerators, and the upper part of the regenerator is designed as an interconnected area, called the combustion chamber, which is the main reaction area after the mixture fuel is preheated. The mixture fuel reacts in the RTO unit to release heat and maintain the heat balance of the system. The excess heat passes through the top gas outlet, and the heat is exported to the boiler or heat exchanger in the form of high temperature smoke to produce heat medium for heating or other means of energy. The pneumatic directional valve in the lower part of the RTO unit can realize the switching between inlet and outlet flow direction, and realize the heat transfer and balance process between the regenerative chambers.

(4) The main fan can provide CMM/air mixture transportation power for RTO unit, overcome the resistance of oxidation device, realize frequency conversion regulation, and adjust the flow rate of the mixture flow according to the load change.

(5) Combustion-supporting fan, which can provide combustion air for the fuel of RTO unit in the cold start-up process, realize full combustion and achieve the purpose of preheating the RTO unit inside.

(6) Heat exchangers for SIAH, the structure of which can be gas/gas type, and gas/water type, etc., according to the existing design of heating chamber and the requirement of building heating (BH).

(7) The heat medium conveying pipe network, including the flue gas from the outlet of the RTO unit passes through the heat exchanger to transfer to the wellhead heating room and other heating pipe section, with related instrument and the pipe insulation.

(8) Heat regulation and distribution systems, including pneumatic regulating valves, pneumatic shutoff valves, instrumentation and corresponding insulation measures, etc. It is used to realize the adjustment and distribution of available heat between different heat loads.

(9) The smoke reflux preheating air intake system mainly consists of smoke regulating valve, smoke insulation conveying pipeline, intake air pipe and regulating valve, intake/smoke mixing section and so on. The main function of the system is to adjust the flow of smoke from the back end of the heat exchanger to the chimney, to raise the inlet air temperature above the dew point temperature of water, and then to mix with the CMM to avoid the hidden danger of ice formation in the mixing process.

## 3. Application effect analysis

### 3.1 Mine basic load requirement

Taking a northern coal mine as an example, it is planned to use CMM RTO system instead of coal-fired boiler to realize SIAH, and to provide Building heating (BH) for air well duty room and boiling water (BW) for drinking. The lowest monthly mean temperature in winter is -19 ℃, and the air flow rate of the wellbore is 10000Nm$^3$/h. According to the calculation, the demand for SIAH is 4962kW. At the same time, the BH load is 600kW, and BW load is 400kW. the total load is 5962kW.

### 3.2 Process system design

Design a set of 100,000Nm$^3$/h CMM RTO device and waste heat steam boiler. When the treatment concentration of the RTO unit is 1.2%, the heat output is 9095 kW. Considering the transmission loss and heat transfer efficiency, the heat source heat output is 6063 kW, which can satisfy demand of SIAH, BH and BW.

Using the flow regulating valve to regulate the steam flows to SIAH, BH, and BW, etc., according to heat load requirements, so that the heat produced by the waste heat boiler is reasonable and effective allocated. The process is shown below.

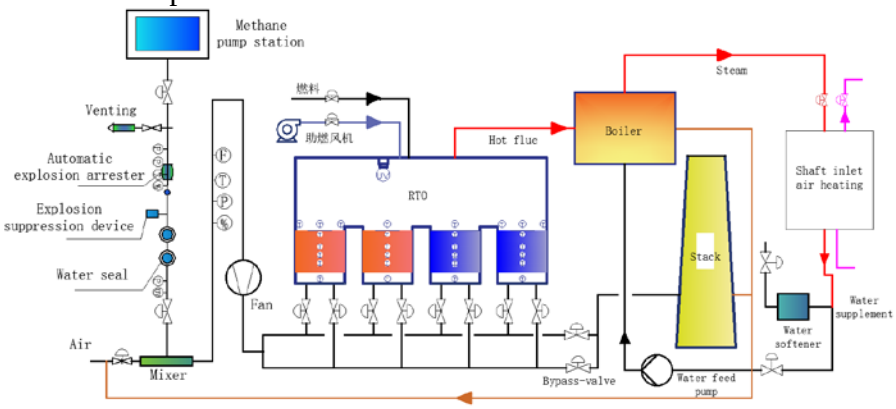


Fig.3 The process of flue for heating the shaft and supplying heat

### 3.3 Application

When the weather conditions change, the inlet air temperature rises to -10 ℃, and the SIAH load drops to 2835 kw, while the SIAH, BH and BW load total 3835 kw. The concentration of treated methane can be reduced to 0.8%, and the maximum heat output of the waste heat boiler after RTO unit is 4042 kW, which can meet all the heat load requirements (loss and heat transfer efficiency are considered). Similarly, when the inlet air temperature continues to rise to -4 ℃, the treated methane concentration can be reduced to 0.5%. The waste heat boiler can output heat 2526kw (considering the loss of heat transfer and heat transfer efficiency), which can meet the total heat load requirement of 2418kw. At the same time, the smoke temperature from the outlet of the waste heat boiler is about 150 ℃, which should be sent to the chimney. In this process system, part or all of it (according to the actual demand, with excess smoke sent to the chimney) would be used for heating the intake of cold air in the mixture section, to avoid the phenomenon of mixing and icing in the transportation process and avoid the occurrence of the running accident.

The methane concentration of the CMM is about 8%, with a total utilization amount of 12,000

$Nm^3/h$. When the ambient temperature is -19 ℃ and the target gas mixture temperature is 21 ℃, the flow rate of the air to be mixed and the smoke reflux are 67,000$Nm^3/h$ and 21,000$Nm^3/$ h, respectively. When the ambient temperature is -15 ℃, the fluxes of mixed air and smoke reflux are 69,000$Nm^3/h$ and 19,000$Nm^3/h$, respectively. When the ambient temperature is -10 ℃, the amount of air mixed and smoke reflux is 71,000$Nm^3/h$ and 17,000$Nm^3/h$ respectively (assuming that the smoke reflux temperature is constant at 150 ℃ when the ambient temperature changes). It is estimated that the smoke flow at the outlet of the waste heat boiler is about 24,000$Nm^3/h$, and the excess flue gas is sent directly to the chimney except the smoke reflux.

## 4. Conclusion

(1) In the designed four-chamber structure RTO device, only one chamber changes from inlet to outlet when the directional valve is switched, and wouldn't occur the phenomenon of no air flow into the regenerator resulting in blower pressure suppression. The relative cross-sectional area of a single regenerator is smaller, the airflow distribution is more uniform, and the oxidation effect is better.

(2) the heat regulation and distribution system are composed of pneumatic regulating valve, pneumatic shutoff valve, flow meter and monitoring system, used to regulate and distribute available heat between different heat loads after oxidation. While satisfying the heat load demand, the smoke from the outlet of the heat exchanger is reflux to the CMM/air mixture section, mixed with the cold air to raise the inlet air temperature, which can not only prevent the freezing of the mixture gas transportation process in heating season, but also improve the circulating heat efficiency of the system, realizing the thermal energy cascade utilization of smoke.

(3) With the country paying more and more attention to environmental pollution control such as haze, the promotion of new energy saving and environmental protection heating technology in coal mines will show a broad application prospect. At present, the technology of RTO has gradually become the research hotspot， and has been applied more and more in the coal industry. Taking the CMM RTO technology as an example, it can not only destroy and treat low concentration CMM, but also provide stable heat medium output, which makes coal enterprises solve their own heating demands while obtaining policy subsidy. With the implementation of carbon trading policy, the economy of the technology will be better, which is expected to replace the existing SIAH mode in the coal industry.

## References


[1] C.Özgen K, A. Felicia, C. Michael, P. Sally, Coal mine methane: a review of capture and utilization practices with benefits to mining safety and to greenhouse gas reduction, Int. J. Coal Geol. 86 (2011) 121-156.

[2] Shouquan Hu, Chao Liang, Huajie Liu. Research of Fushan gold mine shaft antifreezing[J]. Mining Technology, 2013,13(4):69-71.

[3] Rengang Zhao, Jinping Liu, Yuhua Guo. Applicance of the electricity offers warmth on the form of well is offered warmth in coal mine[J]. Coal Technology, 2006, 25(11):36-38.

[4] Xiaochen Zheng， Baoping Xi， Xuechun Cheng. Shaft antifreezing and energy storage heating technology under condition of large temperature diference[J]. Safety in Coal Mines, 2016, 47(2):81-87.

[5] Jian Jia. Application of Ventilation Air Methane Oxidization and Waste Heat Utilization Technology in Shanxi Lu'an Gaohe Coal Mine[J]. MINING SAFETY & ENVIRONMENTAL PROTECTION, 2014(06): 68-72.

[6] Lü Yuan, Jiang Fan, XiaoYunhan. Experimental study of coal mine ventilation air methane [J]. Journal of China Coal Society,2011,36(6): 973-977.

[7] J.L. Wang, L.Y. Feng, S. Davidsson, M. Höök, Chinese coal supply and future production outlooks, Energy 60 (2013) 204-214.

[8] K. Shine, J. Fuglestvedt, K. Hailemariam, N. Stuber, Alternatives to the global warming potential for comparing climate impacts of emissions of greenhouse gases, Clim. Change 68 (2005) 281-302.

[9] Zheng Bin, Liu Yongqi, Liu Ruixiang, et al. Oxidation of coal mine ventilation air methane inthermal reverse-flow reactor [J]. Journal of China Coal Society, 2009, 34(11):1475-1478.

[10] Yang Y, Wu Y, Liu H, et al. Enrichment of ventilation air methane by adsorption with displacement chromatography technology: Experiment and numerical simulation [J]. Chemical Engineering Science, 2016,149:215-228.

[11] Zhou Xian. Experiment study of coal mine ventilation air methane oxidation [D]. Beijing: Institute of Engineering Thermophysics Chinese Academy of Sciences, 2008.

[12] Zheng C, Chen Z, Kizil M, et al. Characterisation of mechanics and flow fields around in-seam methane gas drainage borehole for preventing ventilation air leakage: A case study [J]. International Journal of Coal Geology, 2016,162:123-138.

[13] Kundu S, Zanganeh J, Moghtaderi B. A review on understanding explosions from methane-air mixture [J]. Journal of Loss Prevention in the Process Industries, 2016,40:507-523.

[14] L. Hao, R. Wang, Y. Zhao, K. Fang, Y. Cai, The enzymatic actions of cellulase on periodate oxidized cotton fabrics [J], Cellulose 25 (2018) 6759-6769.

[15] R. Wang, C. Yang, K. Fang, Y. Cai, L. Hao, Removing the residual cellulase by graphene oxide to recycle the bio-polishing effluent for dyeing cotton fabrics [J], Journal of Environmental Management 207 (2018) 423-431.